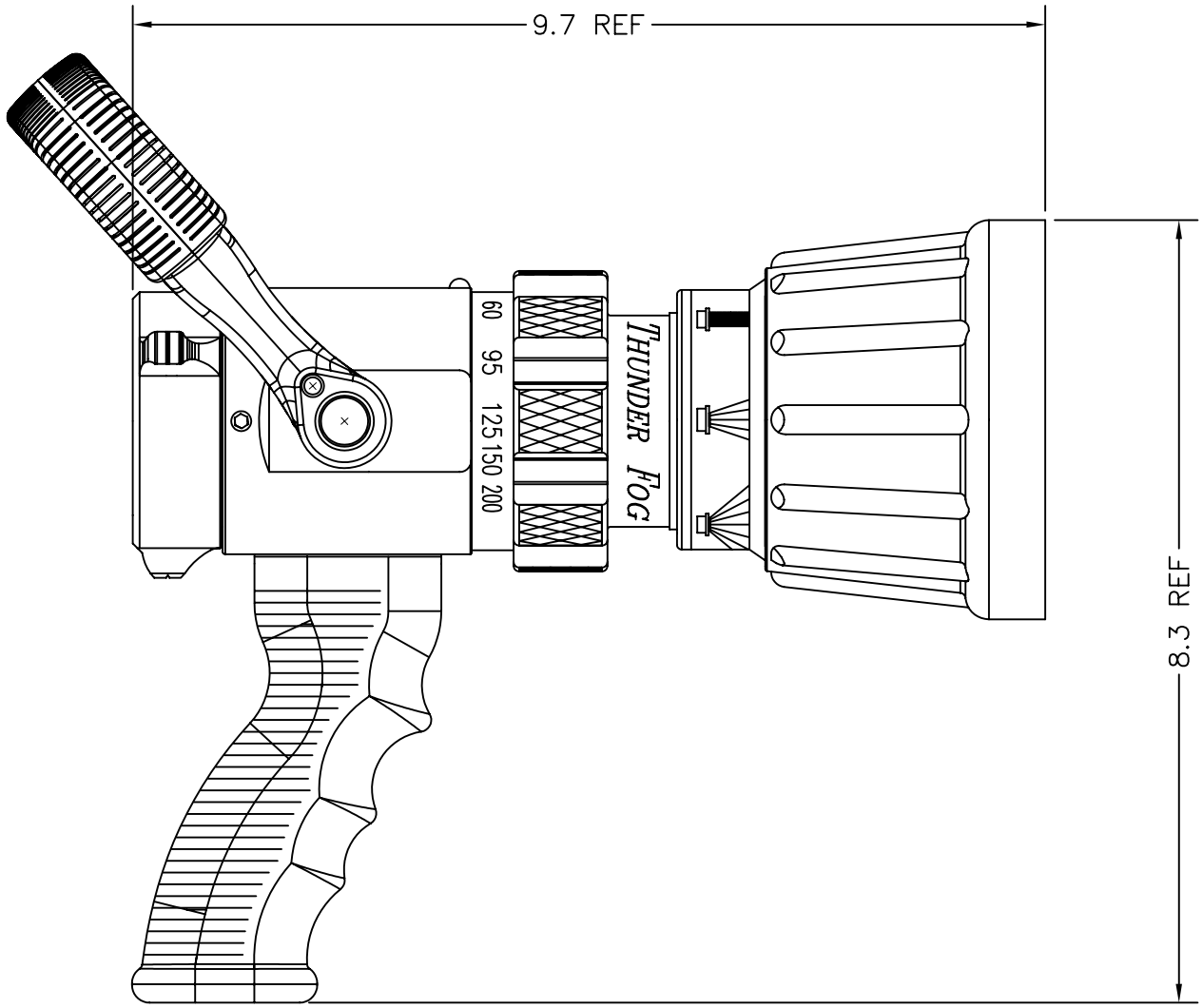

PART NUMBER: FTS200PS

SHEET 1 OF 1

DESCRIPTION: THUNDERFOG W/GRIP 1.5"FEMALE

EXTRA DESC: 30–200 GPM @ 100 PSI SPINNING TEETH

TASK FORCE TIPS, INC.
2800 E. EVANS AVE.
VALPARAISO, IN 46383
219–462–6161

REV	DATE	INITIALS
1	11/16/09	CPD

SCALE: 1/2x

PRINT DRAWN 8/11/99 BMH

PRINT APPROVED 11/18/09 TLH

DESIGN ENGINEER Robert W. Steingass

DIMENSIONS IN 'INCHES' UNLESS SPECIFIED OTHERWISE

FILE: F\FIN & SUB\FTS200PS

F04–0052–01 REV. 00